AETECHRON

7114

Operator's Manual

Precision Industrial AC/DC Amplifier

574.295.9495 | www.aetechron.com
2507 Warren Street, Elkhart, IN 46516

Limited One-Year Warranty

SUMMARY OF WARRANTY

AE TECHRON INC. of Elkhart, Indiana (Warrantor) warrants to you, the ORIGINAL COMMERCIAL PURCHASER ONLY of each NEW **AE TECHRON INC.** product, for a period of one (1) year from the date of purchase, by the original purchaser (warranty period) that the product is free of defects in materials or workmanship and will meet or exceed all advertised specifications for such a product. This warranty does not extend to any subsequent purchaser or user, and automatically terminates upon your sale or other disposition of our product.

ITEMS EXCLUDED FROM WARRANTY

We are not responsible for product failure caused by misuse, accident or neglect. This warranty does not extend to any product on which the serial number has been defaced, altered, or removed. It does not cover damage to loads or any other products or accessories resulting from AE TECHRON INC. product failure. It does not cover defects or damage caused by the use of unauthorized modifications, accessories, parts, or service.

WHAT WE WILL DO

We will remedy, at our sole discretion, any defect in materials or workmanship by repair, replacement, or refund. If a refund is elected, you must make the defective or malfunctioning component available to us free and clear of all liens or other encumbrances. The refund will be equal to the actual purchase price, not including interest, insurance, closing costs, and other finance charges less a reasonable depreciation on the product from the date of original purchase. Warranty work can only be performed at our authorized service centers or at our factory. Expenses in remedying the defect will be borne by **AE TECHRON INC.,** including one-way surface freight shipping costs within the United States. (Purchaser must bear the expense of shipping the product between any foreign country and the port of entry in the United States and all taxes, duties, and other customs fees for such foreign shipments.)

HOW TO OBTAIN WARRANTY SERVICE

When you notify us of your need for warranty service, we will give you an authorization to return the product for service. All components must be shipped in a factory pack or equivalent which, if needed, may be obtained from us for a nominal charge. We will take corrective actions within a reasonable time of the date of receipt of the defective product. If the repairs made by us are not satisfactory, notify us immediately.

DISCLAIMER OF CONSEQUENTIAL AND INCIDENTAL DAMAGES

You are not entitled to recover from us any consequential or incidental damages resulting from any defect in our product. This includes any damage to another product or products resulting from such a defect.

WARRANTY ALTERATIONS

No person has the authority to enlarge, amend, or modify this warranty. The warranty is not extended by the length of time for which you are deprived of the use of this product. Repairs and replacement parts provided under the terms of this warranty shall carry only the unexpired portion of this warranty.

DESIGN CHANGES

We reserve the right to change the design of any product from time to time without notice and with no obligation to make corresponding changes in products previously manufactured.

LEGAL REMEDIES OF PURCHASER

There is no warranty that extends beyond the terms hereof. This written warranty is given in lieu of any oral or implied warranties not contained herein. We disclaim all implied warranties, including, without limitation, any warranties of merchantability or fitness for a particular purpose. No action to enforce this Warranty shall be commenced later than ninety (90) days after expiration of the warranty period.

AE Techron, Inc.
Customer Service Department
2507 Warren Street
Elkhart, IN 46516
U.S.A.
574.295.9495
www.aetechron.com

Contents

1 Introduction 5
2 Amplifier Unpacking and Installation 6
2.1 Safety First 6
2.2 Unpacking 6
2.3 Installation 6
3 Connections and Startup 7
3.1 Controlled Current Operation 7
3.2 Connecting the Load 7
3.3 Connecting the Input Signal 7
3.4 Connecting the AC Supply 8
3.5 Start-up Procedures 8
4 Operation 9
4.1 Front-Panel Controls 9
4.2 Front-Panel Indicators 10
4.3 Connectors 11
5 Advanced Configuration 13
5.1 Internal Jumpers and Settings 13
6 Applications 16
6.1 RAIL V Settings for Increased Voltage or Current 16
6.2 Remote Status and Control using the DB-9 Connector 16
6.3 Controlled Current Operation 18
6.4 Using the 7114 as a Battery Simulator/Four-Quadrant Supply 22
6.5 Using the 7114 for Overvoltage Testing 22
6.6 Using the 7114 for PSRR Measurements 23
6.7 Using the 7114 for Amplfier CMRR Measurements 26
6.8 Using the 7114 to Create Complex Waveforms 27
7 Maintenance 28
7.1 Clean Filter and Grills 28
8 Troubleshooting 29
8.1 Introduction & Precautions 29
8.2 Visual Inspection 29
8.3 No Signal 29
8.4 No Power/Power Switch Not Illuminated 29
8.5 Fault LED is Illuminated 30
8.6 Factory Service 31
9 Specifications 32

Figure 1.1 – 7114 Front and Back Panels

1 Introduction

Congratulations on your purchase of a 7114 precision industrial AC/DC amplifier. AE Techron's 7114 amplifier is a 400-VA, 4-quadrant, AC and DC amplifier that provides exceptional versatility and value. Compact size, user configurability, DC-Max™ topology, and AE Techron toughness makes the 7114 the ideal lab partner for automotive conducted immunity testing, PSRR testing, or any application where more voltage or current is needed than is available from the signal source.

Compact Power

The 7114 weighs just 20 pounds and fits into one-half of a 2U rack space, but still can output up to 400 watts RMS continuous. This makes the 7114 a great choice when size or portability are important selection criteria.

Versatile

Front panel user controls give the 7114 a wide range of possible uses; gain, maximum current, and DC offset can be fixed or infinetely varied. The choice of AC or DC coupling makes it suitable both for DC applications and for driving objects like coupling transformers or piezo elements that shouldn't see DC. All controls can be turned off when only a durable, high-current amplifier or DC source is needed. Or each function can be individually enabled to provide the unique set of capabilities needed at the moment.

The 7114 can supply a fixed DC voltage indefinitely, making it essential for DC power tests lasting minutes or hours.

Features

- 15A DC and capable of reproducing 500 kHz ripple or < 4µs dropout/pulses.
- User-variable DC offset: ±20V or ±45V.
- User-adjustable current limit: 25A to 1A.
- Compact 1/2-rack width, 2U height; weighs only 20 lbs.
- Four-quadrant operation.
- AC/DC coupled.
- AE Techron Tough: Protection from over-temperature, over-current, over/under supply voltages; will drive capacitive and inductive loads.

It can also produce a DC output without an input signal and independent of amplifier gain. When an inexpensive function generator is added, the 7114 becomes a versatile test solution providing DC with both ripple and dropout.

DC-Max™

7114 is built with our new DC-Max topology. Amplifiers with DC-Max have long term DC power that is more than 40% greater than traditional designs. This increased DC performance better matches the power requirements found in DC conducted immunity and PSRR testing.

AE Techron Toughness

The 7114 is compact in size, but it is designed using the same conservative design rules and protection systems that have made AE Techron amplifiers the toughest audio bandwidth amplifiers available.

2 Amplifier Unpacking and Installation

The 7114 amplifier is a precision instrument that can be dangerous if not handled properly. Lethal voltages are present in both the AC input supply and the output of the amplifier. For this reason, safety should be your primary concern when you setup and operate this product.

2.1 Safety First

Throughout this manual special emphasis is placed on good safety practices. The following graphics are used to highlight certain topics that require extra precaution.

DANGER

DANGER represents the most severe hazard alert. Extreme bodily harm or death will occur if these guidelines are not followed. Note the explanation of the hazard and instruction for avoiding it.

WARNING

WARNING alerts you to hazards that could result in severe injury or death. Note the explanation of the hazard and the instructions for avoiding it.

CAUTION

CAUTION indicates hazards that could result in potential injury or equipment or property damage. Once again, note the explanation of the hazard and the instructions for avoiding it.

2.2 Unpacking

All units are tested and inspected for damage before leaving the factory. Carefully unpack and inspect the amplifier for damage. **Please note any damage for future reference and notify the shipping company immediately if damage is found.** Also, please save the shipping carton and materials as evidence of damage and/or for returning the unit for repair.

Along with any additional accessories purchased by the customer, all 7114 models ship with the following:

- 7114 Amplifier
- Power Cord
- 7114 Operator's Manual (on USB drive) and 7114 Quick Start sheet

2.3 Installation

The 7114 amplifier is packaged in a rugged powder-coated steel chassis. This chassis is 2U (rack units) tall and has a width one-half of a standard EIA (Electronic Industries Association) rack. It can be rack mounted using a custom rack shelf/adapter (not supplied). This adapter can be used to mount one unit (with an adjacent opening for storage) or two units side-by-side in a single 2U height rack space. Use standard rack mounting hardware to mount the unit. Use nylon washers if you wish to protect the powder-coat finish on the front of the product.

Optionally, the unit can be placed on a bench top; please keep in mind that the protective powder-coating can be scratched when other equipment is placed on it, especially when there is dirt present.

Allow ample space on the sides and especially the back of the amplifier for heated air to escape. The unit should be mounted in a rack that is adequately ventilated and not sealed. Likewise, the front of the unit should be unobstructed to allow cool air to enter the amplifier.

CAUTION

Do not operate the amplifier in a small sealed chamber of any kind. Improper operations and overheating will result.

3 Connections and Startup

This section details the wiring and startup procedures for a 7114 amplifier operating in Controlled-Voltage mode (factory default). Before connecting the unit, make sure the AC power cord is unplugged.

3.1 Controlled Current Operation

IMPORTANT: If your application requires Controlled Current operation, the 7114 first should be wired and tested in Controlled-Voltage mode to verify that the input signal and the amplified output are operating correctly. Once proper operation is confirmed, refer to the ***Applications*** section of this manual for instructions on configuring and operating your product in Controlled-Current mode.

WARNING

ELECTRIC SHOCK HAZARD.

Output potentials can be lethal. Make connections only with AC Power OFF and input signals removed.

3.2 Connecting the Load

3.2.1 Preparation and Cautions

Before connecting the unit, make sure the AC power is disconnected.

Always use the appropriate wire size and insulation for the maximum current and voltage expected at the output. Never connect the output of the amplifier to any other model amplifier, power supply, signal source, or other inappropriate load; fire can result.

3.2.2 Connecting the Outputs

Connection to the output of the unit is to 5-way binding posts located on the product's front panel. The output connection can be made using tinned wire up to 12 AWG in size. Bare wire, pin connectors, spade terminals or banana plug terminators can be used. Connect the load across the positive and negative output terminals. See **Figure 3.1.**

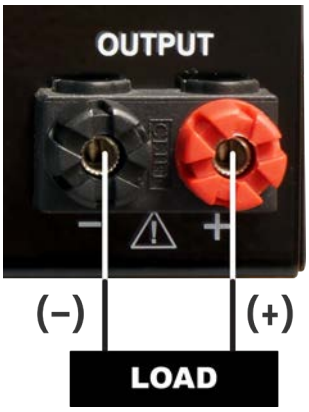

Figure 3.1 – Connecting the Load

3.3 Connecting the Input Signal

Two front-panel input connectors are available on the product's front panel: an unbalanced Input BNC jack and a balanced Input "WECO" terminal block connector. Connection should be made to the unbalanced or balanced input connector as shown in **Figure 3.2.** Use cables that are high quality and shielded to minimize noise and to guard against possible feedback.

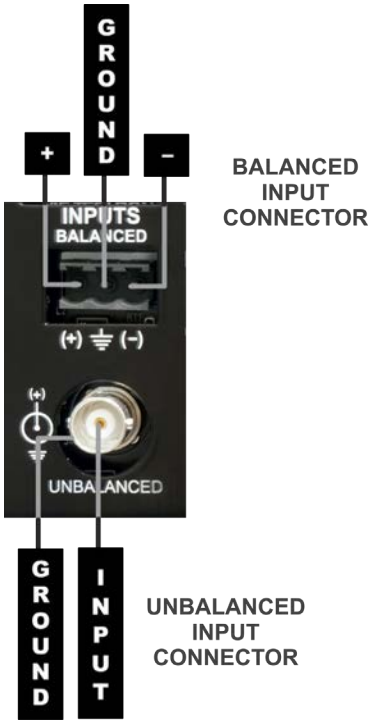

Figure 3.2 – Wiring for Unbalanced or Balanced Input Connector

The product also can receive input signal through the back-panel DB-9 connector. In addition to signal input, this connector can be used for remote control and monitoring applications. Please refer to the ***Applications*** section of this manual for information on using the DB-9 connector.

The 7114 can receive input signal simultaneously from all three input connectors, allowing for the creation of complex input waveforms from up to three separate input devices. Please refer to the ***Applications*** section of this manual for information on complex waveform creation.

3.4 Connecting the AC Supply

The power cord connects to a standard 15A 3-pin IEC-type male connector on the back panel (see **Figure 3.3**). Make sure the power switch on the front panel is switched to the OFF (O) position. Make sure the power cord is inserted and seated fully into the IEC connector by moving it slightly back and forth and up and down while pushing in. The power cord is relatively stiff and should be routed so that there is no excessive force pulling to the sides or up or down that would stress the pins or internal connections.

Figure 3.3 – Closeup of AC Mains Outlet

3.5 Start-up Procedures

1. If an input signal source is required, connect the signal source and turn down the input signal level.
2. If a DC supply is required, push the Offset switch to enable the Variable offset, then use the Offset variable control knob to select the desired DC supply.
3. Depress the POWER switch to turn the unit ON.
4. Turn up the level of your signal source until the green SIGNAL LED is lit (>300 mV).
5. Turn up the variable Gain control on the amplifier (if enabled) until the desired voltage or power level is achieved.
6. Adjust the input signal level to achieve the desired output level.

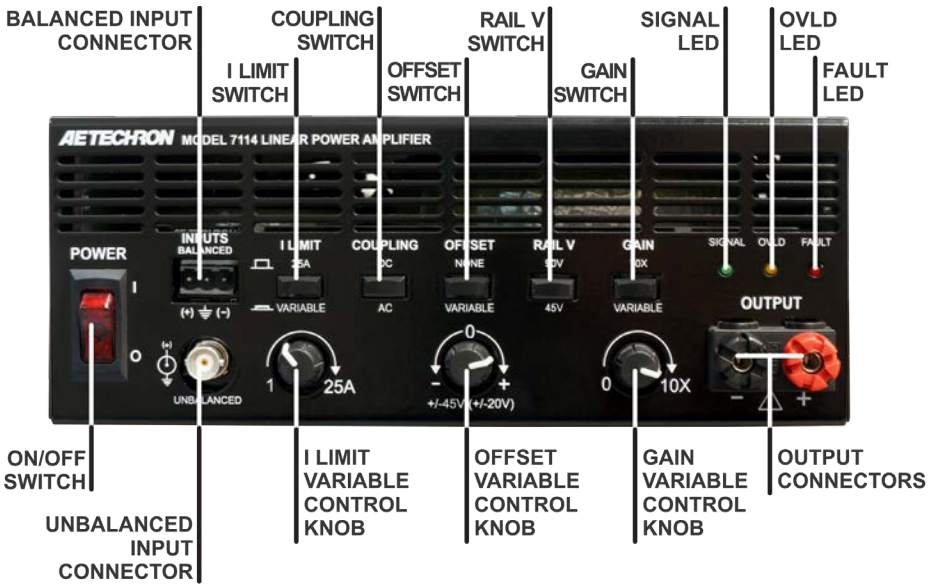

Figure 4.1 – Front Panel Controls, Indicators and Connectors

4 Operation

4.1 Front-Panel Controls

This section provides an overview of Front-Panel controls found on the 7114 amplifier. See **Figure 4.1** for control locations.

4.1.1 POWER Switch

The lighted rocker POWER switch controls the AC mains power to the unit. Switch to the ON position (|) to turn the unit on. The switch's internal LED will light. Switch to the OFF position (O) to turn the unit off. See **Figure 4.1.**

4.1.2 Push Button Switches and Variable Control Knobs

The 7114 uses push button switches to toggle between functions. For each switch, press the button to place the switch in the DOWN position. Press the button again to place the switch in the UP position.

I LIMIT

The I LIMIT button-switch toggles the selection of fixed or variable current limit. When the switch is in the UP position, a fixed, 25A current limit is enabled. When the switch is in the DOWN position, the current limit can be varied between 1A and 25A using the variable control knob located below the I LIMIT switch. Use the Current Limit setting when testing to protect delicate devices from possible over-current conditions.

COUPLING

The COUPLING button-switch toggles the selection of DC or AC coupling. When the switch is in the UP position, the unit can receive and amplify both DC and AC signal. When the switch is in the DOWN position, a low-pass filter will prevent the transmission of DC signal (-3dB at 5.5 Hz).

OFFSET

The OFFSET button-switch toggles the selection of DC offset to none or variable. When the switch is in the UP position, the DC offset of the unit will be zero. When the switch is in the DOWN position, the DC offset can be varied between ±20V using the variable control knob located below the OFFSET switch. The unit also can be configured for a variable offset of ±45V. See the ***Advanced Configuration*** section in this manual for more information.

RAIL V

The RAIL V button-switch toggles the selection of low- or high-rail operation. When this switch is in the UP position (default), the unit will operate

with the power supply rails in a series configuration for high-voltage output. When this switch is in the DOWN position, the unit will operate with the power supply rails in a parallel configuration for high-current output. This will result in a maximum voltage potential of 90V (high-rail) or 45V (low-rail). For more information on how to set the RAIL V switch for increased voltage or current, see the ***Applications*** section.

NOTE: If the RAIL V switch setting is changed from high to low rails while the unit is operating, the output signal may clip.

GAIN
The GAIN button-switch toggles the selection of fixed or variable gain. When the switch is in the UP position, a fixed gain of 10X is enabled. When the switch is in the DOWN position, the gain can be varied between 0-10X using the variable control knob located below the GAIN switch.

4.2 Front-Panel Indicators

Three status indicators are located on the front panel. See **Figure 4.1** for component locations.

4.2.1 SIGNAL Indicator

The SIGNAL LED indicates the unit is powered and receiving an input signal above 300 mV.

4.2.2 OVLD Indicator

The OVLD LED indicates that the output of the unit could not follow the input signal due to voltage or current limits.

To correct the overload condition, turn down the level of the input signal and/or the gain control on the front panel until the OVLD LED turns off.

4.2.3 FAULT Indicator

The FAULT indicator will light when any one of four conditions occurs:

Over-temperature Condition
The FAULT indicator may light when the unit's thermal switches and/or transformers have overheated.

When an over-temperature condition occurs, the unit's fans will continuously operate at high speed until the over-temperature condition is resolved. Turn down your input signal and allow the fans to operate at high speed until they automatically switch to low-speed operation, indicating the unit has cooled enough to resume operation. Then cycle the power switch to return the unit to normal operation. If the unit does not return to normal operation, it may require servicing. Please see the ***Troubleshooting*** section for more information.

NOTE: If the unit's transformers have overheated, the fans will typically need to operate at high speed for at least 10-15 minutes in order to resolve the over-temperature condition.

Over-voltage Condition
The FAULT indicator may light when the AC mains voltage is more than +10% of nominal.

To clear an over-voltage fault condition, the AC mains must be brought down to the nominal value. Once the over-voltage condition has been cleared, cycle the power switch to return the unit to normal operation. If it does not return to normal operation, the unit may require servicing. Please see the ***Troubleshooting*** section for more information.

Overload Condition
If the unit's internal Overload Latch jumper setting has been changed from the factory default and configured for unit shut down when an overload condition occurs, the FAULT indicator will light when an overload condition occurs.

To clear the fault-at-overload condition, turn down your input signal, and then cycle the unit's power switch to return it to normal operation.

Please refer to the ***Advanced Configuration*** section for more information on the Overload Latch jumper and fault-at-overload setting.

Component Failure
The FAULT indicator may light when an output transistor or other component has failed.

Figure 4.2 – Back Panel Connectors

If the unit does not return to normal operation after correcting or ruling out over-temperature, over-voltage and overload conditions, it may require servicing. Please see the ***Troubleshooting*** section for more information.

4.3 Connectors

This section provides an overview of the connectors found on the 7114 amplifier. Please refer to **Figures 4.1 and 4.2** for visual locations.

4.3.1 Input Connectors

The 7114 provides two front-panel and one back-panel connector for signal input. The front-panel BNC connector provides unbalanced input, while the front-panel WECO and the back-panel DB-9 connectors provide balanced input.

Signal input can occur from one, two, or all three connectors simultaneously. In addition, a DC offset signal can be added, allowing for the control and amplification of a wide range of complex waveforms. See the ***Applications*** section of this manual for more information.

Unbalanced BNC Connector

The unbalanced BNC connector is located on the unit's front panel to the right of the Power switch. It provides standard unbalanced signal input. See **Figure 4.3** for connector wiring.

Figure 4.3 – BNC Connector Wiring

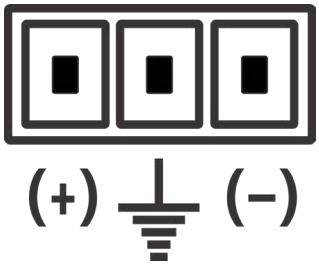

Figure 4.4 – WECO Connector Wiring

Balanced WECO Connector

The balanced WECO connector is located on the unit's front panel to the right of the Power switch. It provides balanced signal input. See **Figure 4.4** for connector wiring.

DB-9 Connector

The DB-9 connector is located on the unit's back panel. It provides balanced signal input. See **Figure 4.5** for connector input wiring.

In addition to signal input, the DB-9 connector can be used for remote monitoring and control func-

tions. See the ***Applications*** section of this manual for more information.

4.3.2 Output Connectors

The 7114 provides a pair of 5-way binding post connectors for signal output. Connection can be made using banana plug connectors, pin connectors, lug terminals, alligator clips, or bare wire. The output connectors accept up to 12 AWG wire. See **Figure 4.6** for connector output wiring.

When building output wiring cables, keep these tips in mind:

- For best performance, especially for high-frequency applications, keep output wire cables as short as possbile.
- To minimize inductance, twist the + and - wire leads together.
- For high current applications, make sure to use a heavy-gauge wire to avoid excessive voltage drops.

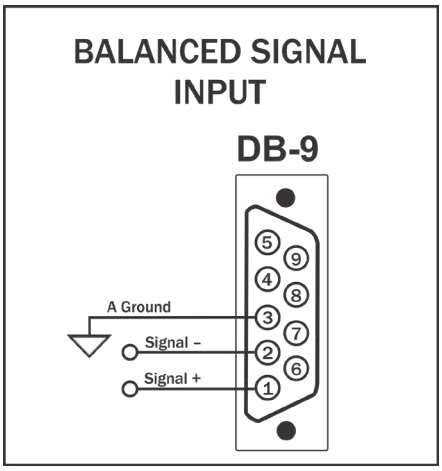

Figure 4.5 – DB-9 Connector Wiring

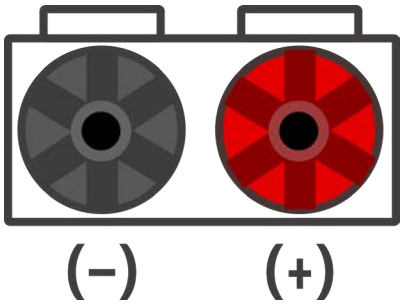

Figure 4.6 – Output Connector Wiring

5 Advanced Configuration

The 7114 was designed to offer great versatility in operation. You can choose from several advanced field-configurable options, including:

- Set the Current Limit to apply to AC waveforms only instead of the default which applies the Current Limit to both AC and DC.
- Change the maximum DC Offset adjustment from ±20V to ±45V for finer control of the variable DC Offset setting.
- Change the mode of operation from Controlled-Voltage to Controlled-Current to operate the unit as a voltage-controlled current source.
- Configure the amplifier to signal a Fault condition when an overload condition occurs.

5.1 Internal Jumpers and Settings

The 7114 contains two "daughter card" circuit boards; each board connects to the main board through two 20-pin, non-locking connectors. All advanced configuration settings are made on the outer-most daughter card, labeled "7100 Controller."

5.1.1 Removing the 7100 Controller Circuit Board

Top Cover Removal

Tool Required

#1 Phillips screwdriver

Procedure

DANGER

Uninsulated terminals with AC mains potential are exposed when the top cover is removed. Do not proceed until the unit has been turned off and the AC Mains has been disconnected.

CAUTION

After turning the unit off, let the unit sit for 3-5 minutes before removing the top cover. This will allow the electrical charge in the power supply capacitors to discharge.

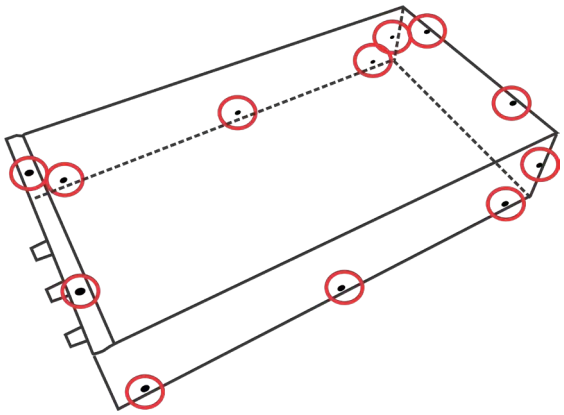

Figure 5.1 – Cover Screw Locations

1. Remove power from the unit and disconnect any load from the outputs. Wait a minimum of three minutes to allow the unit's capacitors to discharge.
2. Use a #1 Phillips screwdriver to remove the twelve (12) Phillips-head screws, as shown in **Figure 5.1**.
3. Slide the cover towards the back of the unit, and then lift the cover straight up to remove and set aside.
4. To replace the top cover, slide the cover in to place on the unit and replace the twelve screws.

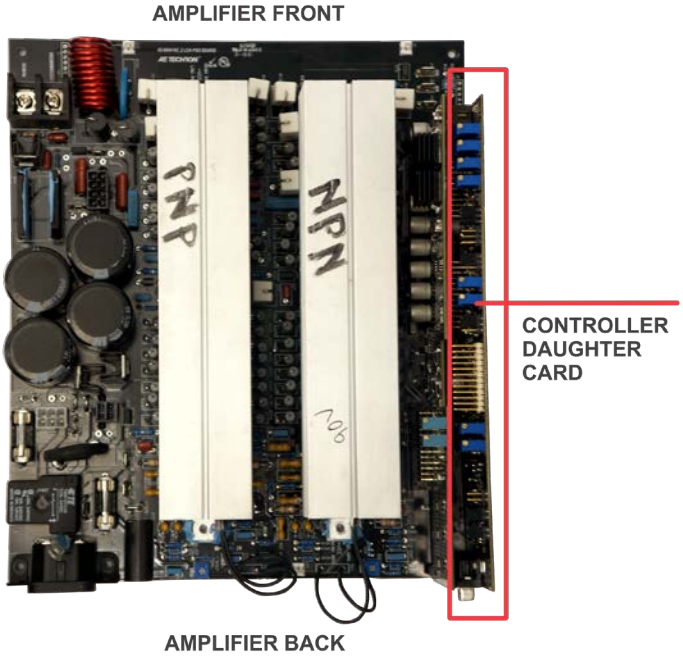

Figure 5.2 – 7114 Controller Board Location

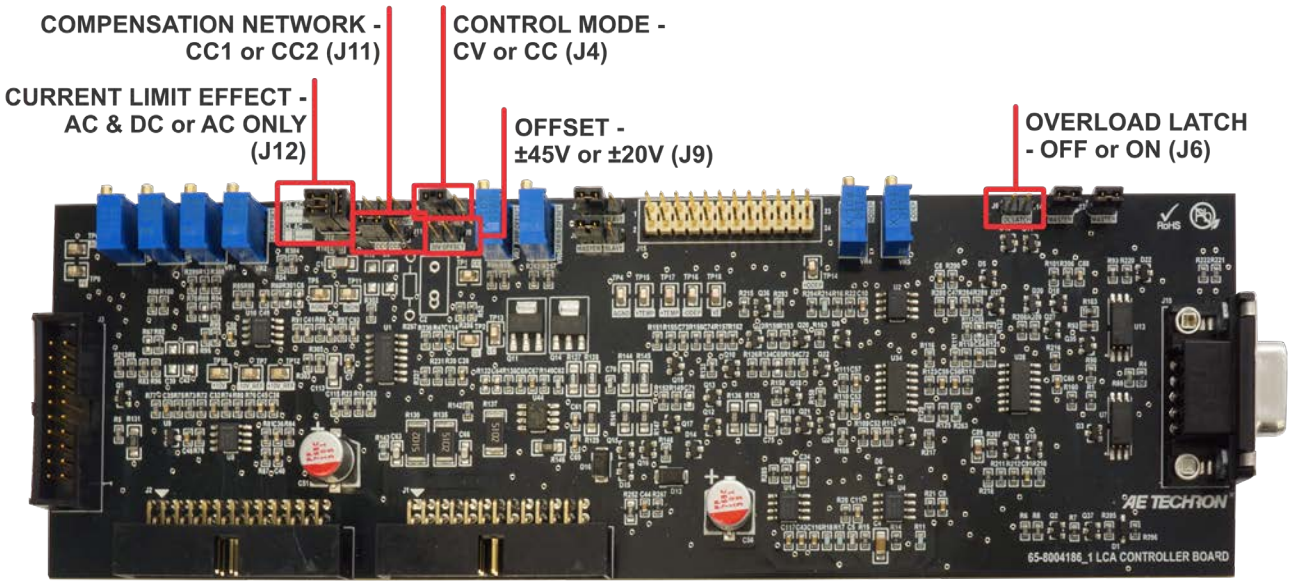

Figure 5.3 – 7100 Controller Board Jumper Locations

Controller Board Removal

Procedure

1. Locate the 7100 Controller card as shown in **Figure 5.2.**
2. Remove the two jack nuts from the DB9 Control Port connector on the back panel.
3. Firmly pull straight up on the card to disconnect it from the two 20-pin connectors.
4. To replace the board, position the 20-pin connectors located on the 7100 Controller card over the matching 20-pin connectors located on the 7100-series main board. Push gently but firmly to seat the card into place in the connectors.
5. Replace the jack nuts on the DB9 Control Port connector.

5.1.2 Jumper Settings on the 7100 Controller Board

Refer to **Figure 5.3** for 7100 Controller Board jumper locations.

Current Limit Effect

The current limit setting (I LIMIT) will affect both AC and DC waveforms (factory default). To configure the unit for a current limit that affects only AC waveforms, move the shunts at jumper **J12** to the positions shown in the AC only setting shown in **Figure 5.4.**

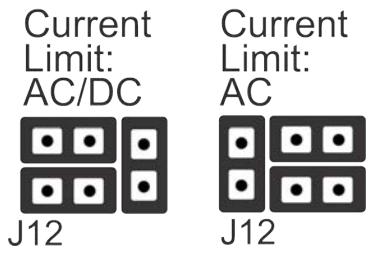

Figure 5.4 – Current Limit Jumper Settings

Controlled Mode

By default, the 7114 operates in Controlled-Voltage mode. In Controlled-Voltage mode, the unit's output voltage will be controlled by its input voltage signal. The 7114 can be configured to operate

CAUTION

In Controlled-Current Mode, the load is part of the amplification circuit, and the relationship of the load to this circuit is critical. For proper and safe operation in Controlled-Current mode, you must observe the following guidelines:

1. **Properly attach a load before operating the unit.**
2. **DO NOT use a blocking capacitor.** The load must have a DC path.
3. **Never leave the load open.** If you feel the load must be fused, which could lead to a potential open circuit, please contact AE Techron Technical Support.
4. **Make sure the load has some inductive component.**
5. **Provide appropriate compensation for the load.**
6. **If oscillation occurs, turn off the unit immediately.**

Failure to follow these guidelines may result **in damage to the amplifier or the load.**

in Controlled-Current mode. In Controlled-Current mode, the unit's output current will be controlled by its input voltage signal.

IMPORTANT: Controlled-Current operation requires the use of a compensation network, and the 7114's default compensation network may not be suitable for your application. For more information on Controlled-Current operation, including how to determine and configure a custom compensation network, see the ***Applications*** section.

To configure the amplifier for Controlled-Current operation, locate jumper **J4** and remove the shunt from **pins 1 and 2** (factory default). Place the shunt across **pins 2 and 3** to place the product in Controlled-Current mode.

Compensation Network

When the 7114 is used in Controlled-Current mode, the current control loop is tuned with an RC network. The factory default network (CC1) provides **75k ohm resistance** and **47 nF capacitance.** If this default network is not adequate for your application and load, CC2 can be used to install a custom RC network.

To change the compensation network, locate jumper **J11.** When **pins 1 and 2** are shunted (factory default), network **CC1** is enabled (75k ohm and 47 nF). To select network **CC2**, place the shunt on jumper **J11** across **pins 2 and 3.**

Remove the shunt from jumper J3 to disable both CC1 and CC2 networks. A small feedback capacitor remains in the circuit to provide stability when operating into an 8-ohm load. For more information on Controlled-Current operation and installing a custom RC network, see the ***"Applications"*** section of this manual.

Maximum Offset

When variable DC offset is selected using the OFFSET button, DC can be offset by ±20V (factory default). To change the default setting to extend the maximum variable DC offset to **±45V,** remove the shunt over **pins 1 and 2** of jumper **J9.**

Overload Latch

When an overload condition occurs, the unit's OVLD LED will illuminate, but it will continue to amplify the input signal. To configure the unit to enter Fault mode when an overload condition occurs, place the shunt over **pins 1 and 2** of jumper **J6.**

6 Applications

6.1 RAIL V Settings for Increased Voltage or Current

The 7114 features a bi-level power supply that contains two secondary transformers. The secondary rails of each transformer can be placed in a series or parallel configuration, as shown in **Figure 6.1,** providing the option for operating in High Voltage mode (increased voltage) or High Current mode (increased current).

As shipped from the factory, the 7114 is set to operate with the transformer rails configured in series, providing a voltage potential of 90V. This configuration works well for high-voltage applications.

For high-current applications requiring a lower voltage potential, press the RAIL V switch to place the transformer rails in parallel. This will result in a maximum voltage potential of 45V.

Refer to the ***Specifications*** section of this manual for maximum voltage and current capabilities when running in High Voltage or High Current modes.

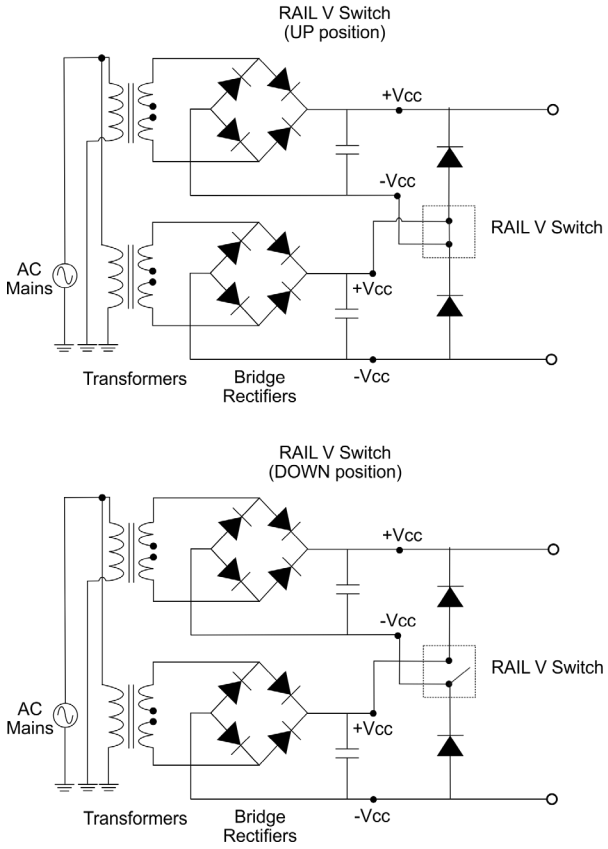

Figure 6.1 – RAIL V Switch Settings Comparison

6.2 Remote Status and Control using the DB-9 Connector

The procedures outlined in this section assume competence on the part of the reader in terms of power supplies, amplifier systems, electronic components, and good electronic safety and working practices.

AE Techron 7114 amplifiers have a DB-9 connector on the back panel that can be used to provide remote control and monitoring of the unit.

The information provided here will instruct you in the wiring of several control and status applications including:

- Balanced Signal Input
- Remote Emergency Stop/Fast Mute/Blanking
- Fault status
- Current monitor

Figure 6.2 maps the pins used for these applications.

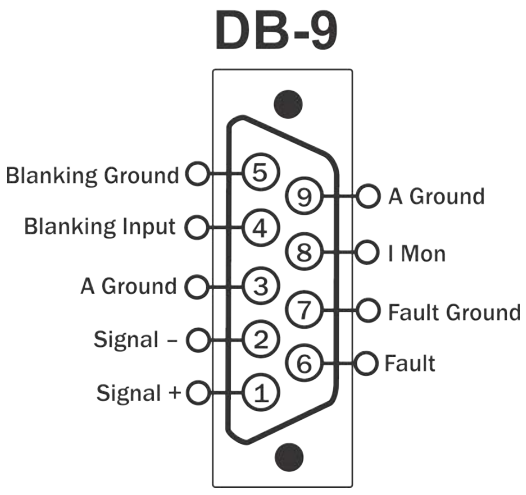

Figure 6.2 – DB-9 Control Port Pinouts

6.2.1 Balanced Signal Input

You can use the DB-9 Control Port located on the back panel of the unit as an additional balanced signal input. This input can be used simultaneously with the front panel unbalanced BNC and/or balanced WECO inputs.

Signal Input

Purpose: Use the DB-9 Control Port as an alternate or additional signal input.
Method: Connect to your signal input device using Pin 1 (signal +), Pin 2 (signal –) and Pin 3 (ground) to a DB-9 connector. See **Figure 6.3.**
Signal Type: AC
Level when Asserted: 10 V maximum
Level when Deasserted: 0 V

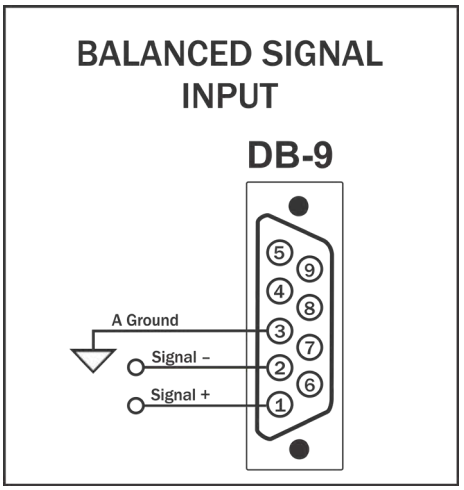

Figure 6.3 – Balanced Input Wiring on DB-9 Control Port

6.2.2 Emergency Stop/Fast Mute/Blanking

Purpose: Use switch or optocoupler to remotely mute the unit.
Method: Assert 5-15VDC between Pin 5 (Blanking Ground) and Pin 4 (Blanking Input) to activate the blanking feature. See **Figure 6.4.**
Signal Type: DC
Level when Asserted: 5 - 15V
Level when Deasserted: 0V
Note: The unit's output is muted when asserted. Normal operation when deasserted.
Blanking input is opto-isolated and requires a ground which Pin 5 (Blanking Ground) provides.

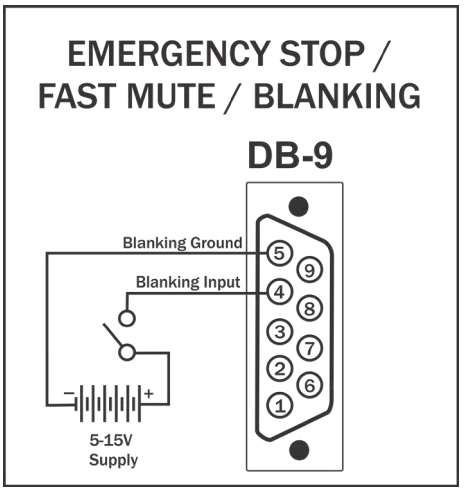

Figure 6.4 – Emergency Stop/Fast Mute/Blanking Application Wiring on DB-9 Control Port

6.2.3 Remote Fault Status Monitor

Using the DB-9 Control Port located on the back panel, you can remotely monitor the Fault status of the unit.

Remote Fault Status

Purpose: Remote LED, when lit, signals a Fault condition.
Method: Supply 5-15VDC to an LED between Pin 7 (Fault Ground) and Pin 6 (Fault). See **Figure 6.5.**
Signal Type: DC
Level when Asserted: Closed through 2 kΩ resistor.
Level when Deasserted: Open
Note: Internal 2 kΩ resistor is in series with an opto-isolated transistor that acts as a switch for Fault status. The Fault input is opto-isolated and requires a ground which Pin 7 (Fault Ground) provides.

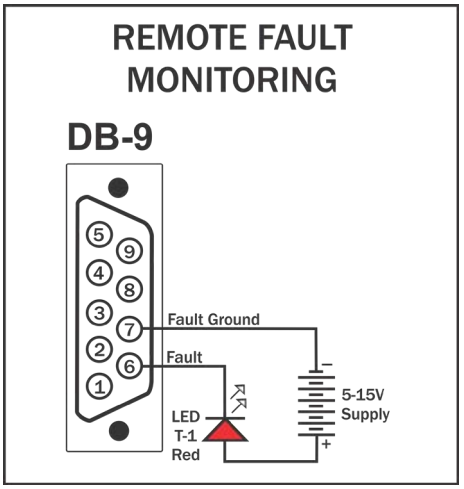

Figure 6.5 – Remote Fault Monitor Application Wiring on DB-9 Control Port

6.2.4 Remote Current Monitor

Using the DB-9 Control Port located on the back panel, you can remotely monitor the current output of the unit.

Remote Monitoring of Current Output
Purpose: Use a voltage meter to monitor output current.
Method: Connect a voltage meter to monitor the output current being produced by the unit. Connect across PIN 8 (I MON+) and PIN 9 (Analog Ground). See **Figure 6.6.**
Signal Type: AC & DC
Level: 5A/V

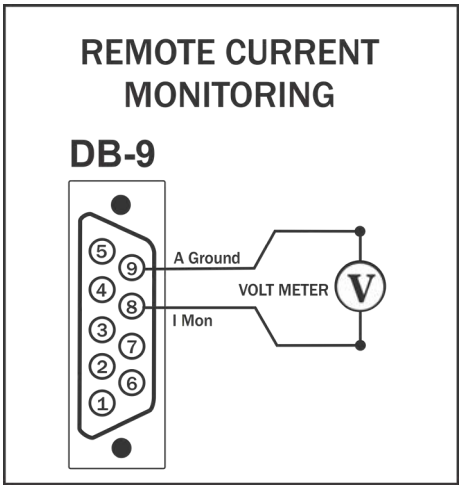

Figure 6.6 – Remote Current Monitor Application Wiring on DB-9 Control Port

6.3 Controlled Current Operation

The procedures outlined in this section assume competence on the part of the reader in terms of power supplies, amplifier systems, electronic components, and good electronic safety and working practices.

6.3.1 Controlled-Voltage vs. Controlled-Current Modes of Operation

AE Techron 7114 amplifier can be field-configured to operate as a **Voltage Amplifier** (Voltage-Controlled Voltage Source) or as a **Transconductance Amplifier** (Voltage-Controlled Current Source). The mode selection is made via jumpers on the unit's controller daughter card. See the ***Advanced Configuration*** section for more information.

When configured as a **Controlled-Voltage** source (voltage amplifier), the amplifier will provide an output voltage that is constant and proportional to the control (input) voltage. If the load's impedance changes, the amplifier will seek to maintain this ratio of input to output voltage by increasing or decreasing the current it produces, as long as it is within the amplifier's ability to create the required current. Use this mode if you want the output voltage waveform to be like the input waveform (see **Figure 6.7**).

Conversely, when configured as a **Controlled-Current** source (transconductance amplifier), the amplifier will provide an output current that is constant and proportional to the control (input) voltage. If the load's impedance changes, the amplifier will seek to maintain this transconductance (ratio of input voltage to output current) by increasing or decreasing the voltage it produces, as long as it is within the amplifier's ability to create the required voltage. Use this mode if you want the output current waveform to be like the input waveform (see **Figure 6.8**).

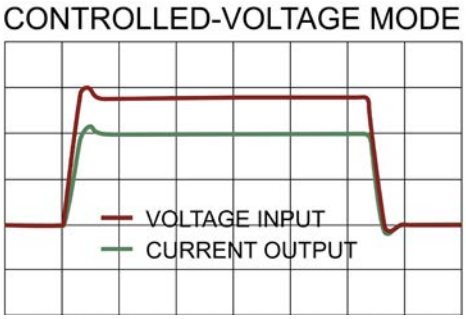

Figure 6.7 – Input to Output Comparison, Controlled-Voltage Operation

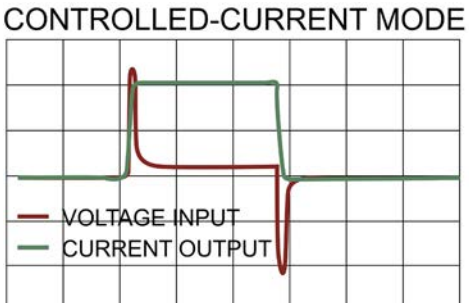

Figure 6.8 – Input to Output Comparison, Controlled-Current Operation

6.3.2 Safety and Operation Considerations for Controlled Current Operation

When an AE Techron 7114 amplifier is configured as a Controlled-Current source, care needs to be exercised in its operation. **Any voltage controlled current source should never be turned on without a load, (with some impedance, real or effective) connected to its output terminals.** When asked to operate in this way, any current source (including an AE Techron amplifier) will increase its output voltage in an attempt to drive the requested current into the load. In an open-circuit condition, creating current flow will be impossible. The current source will increase its output voltage until it reaches its voltage limit. This is a potentially dangerous condition for both the AE Techron amplifier and for any user who might come in contact with the amplifier's output terminals.

When operating in Controlled-Current (CC) mode, a compensation circuit is required to ensure accurate output current. Since the load is a critical circuit component in CC mode, the inductive and resistive values of the load will determine the required compensation values. While the factory-default compensation setting will be sufficient for some applications, the compensation setting may also be adjusted in the field. The following section describes methods for determining and setting proper compensation when operating in Controlled-Current mode.

6.3.3 Controlling Compensation for CC Operation

The AE Techron 7114 amplifier can be configured for either Controlled Voltage (CV) or Controlled Current (CC) mode of operation. When operating the amplifier in Controlled Voltage (CV) mode, compensation is not required. However, when operating in Controlled Current (CC) mode, the load becomes an integral part of the system. In order to ensure system stability and to control available bandwidth, compensation via an RC network is required for CC operation. The following steps will allow you to compensate your unit for operation in CC mode safely and effectively.

STEP 1: Check Amplifier Operation in CV mode.

We recommend that you power-up and enable the amplifier in Controlled Voltage mode without attaching a load before configuring for Controlled Current operation. This will allow you to verify that the input signal and the amplifier are operating correctly.

Once this initial check is completed, power down the amplifier, attach your load, and locate and put the shunt on Jumper J4 on the Controller daughter card across pins 2 and 3 to place the unit in CC mode. (Refer to the ***Advanced Configuration*** section for more information.)

STEP 2: Determine Required Compensation.

When operating an amplifier in Controlled-Current mode, the load becomes an integral part of the system. In order to determine the required compensation for your load, begin by consulting the following table to determine the approximate compensation capacitance (C) required based on the inductance of your load. Note that these calculations are based on empirical measurements and are approximent.

	Load Inductance (L)		
	<200 µH	>200 µH – <1 mH	>1 mH
Compensation Capacitance (CC)	0.001 µF	0.01 µF	0.1 µF

NOTE: Load Resistance (R) is assumed to be <5 ohms.

STEP 3: Determine if Default or Custom Compensation is Required.

If your load inductance is between 200 microHenries and 1 milliHenry, and your load resistance is less than 5 ohms, then you can likely use the default compensation provided by the amplifier's factory-installed RC network. This compensation network is enabled by default when the Current setting is selected on the Controlled Mode jumper.

If your load inductance falls outside of the mid-range, or if your load resistance is greater than 5 ohms, then you must calculate your required compensation. If, after calculating your required compensation, you determine that the default compensation will be insufficient for your load, then you will need to calculate and then enable and install a custom RC network. See **STEP 5** below.

STEP 4: (Optional) Verify Suitability of Default Compensation (CC1)

If desired, the following values of the components contained in the default RC network can be used with the formulas provided in **STEP 5** below to verify the suitability of the default compensation for your uses.

Compensation Resistor: 75k ohms

Compensation Capacitor: 47 nF

Parallel Capacitor: 100 pF

STEP 5: Calculating Values for an RC Network for Custom Compensation

If the default RC network does not provide suitable compensation for your intended load, you will need to install a custom RC network that is matched to your load. This network will require two components (a resistor (R) and a capacitor (C)) to be installed on the unit's Controller daughter card. To calculate the approximate values required for each component, use the following fomulas.

COMPENSATION FORMULAS:

To find the value for the resistor (Rc) in the RC network: Rc = 20,000 x 3.14 x L x BW

where:

Rc is compensation resistance in ohms.

L is load inductance in henries.

BW is bandwidth in hertz.

To find the value for the capacitor (Cc) in the RC network: Cc = L/ (R x Rc)

where:

Cc is compensation capacitance in farads.

L is load inductance in henries.

R is resistance of load in ohms.

Rc is compensation resistance in ohms.

STEP 6: Installing and Enabling the Custom RC Network

Once an approximate Rc and Cc have been computed, these values will need to be evaluated. To do this, you will need to install the custom components in the unit and enable the alternate compenation network (CC2).

Refer to the topic **"Internal Jumpers and Settings"** in the ***Advanced Configuration*** section of this manual for instructions on accessing the Controller daughter board in the amplifier. Then locate **jumper J11,** and remove the shunt from **pins 1 and 2.** Replace the shunt on **pins 2 and 3** of **jumper J3** to enable the custom RC network pathway (CC2).

Next, install components with the required values in the Controller daughter board at locations **R5 and C2** as shown in **Figure 6.9.**

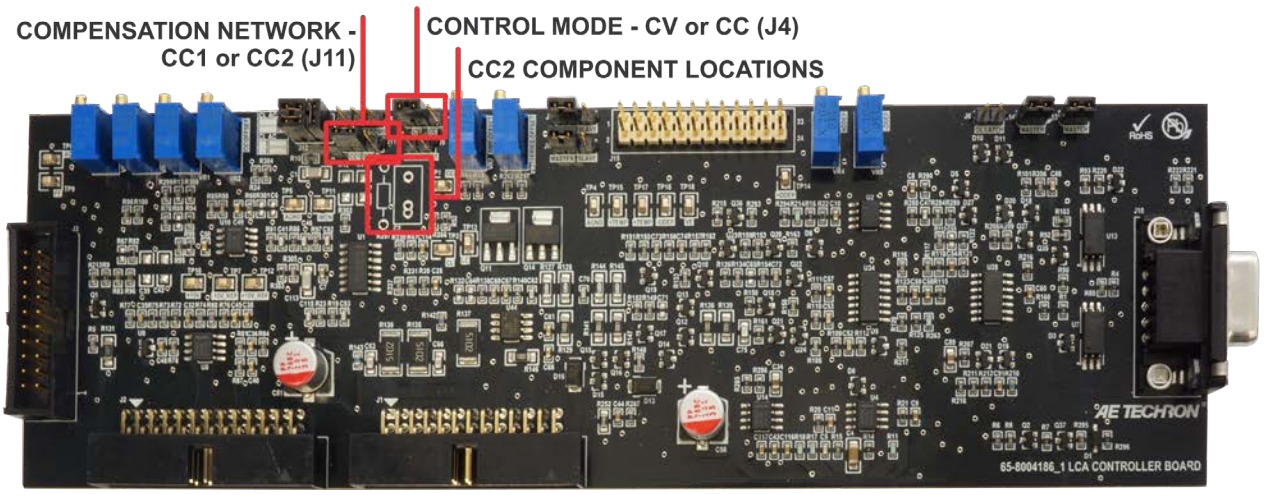

Figure 6.9 – Control Mode Jumper, Compensation Network Jumper and Custom Compensation Locations

STEP 7: Optimizing the Compensation Values.

Remember the load you are connecting is a part of the system and the unit should not be turned on without the load being connected.

After installing the components, check to ensure that the Controlled Mode jumper is set to Current mode, then power up the unit without signal input.

To begin testing, input a square wave with a frequency of 100 Hz to 1 kHz, or a squared pulse at a low level (typically 0.25 to 2.0 volts). A limited-rise-time, repetitive pulse of low duty cycle is preferred.

Observe the output current through a current monitor or current probe. Look for clean transition edges. The presence of ringing or rounding on the transition edges indicates compensation problems. (See **Figure 6.10**.)

If a change in compensation is necessary, an adjustment to the resistor component of the Compensation circuit is probably required.

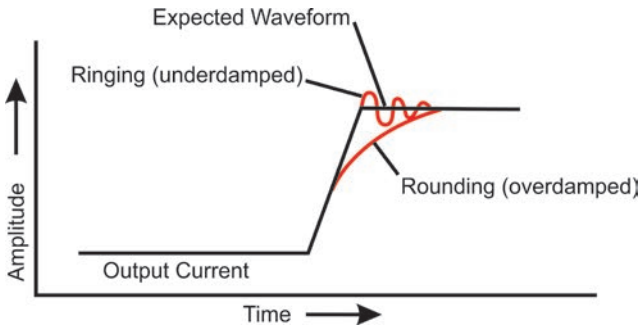

Figure 6.10 – Compensation Effects on Waveform

If the output current waveform is ringing, the circuit is underdamped: You have too much compensation and should lower the resistance (see **Figure 6.11**).

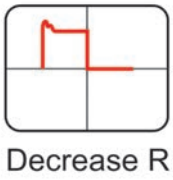

Figure 6.11 – Square Wave Showing a Decrease in R is Required

If the output current waveform is rounded, the circuit is overdamped: You have too little compensation and should increase resistance (see **Figure 6.12**).

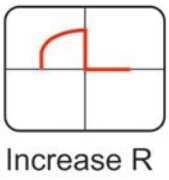

Figure 6.12 – Square Wave Showing an Increase in R is Required

If the output current waveform is neither underdamped or overdamped, but the top of the squarewave is not level, then you should instead decrease the capacitor value (see **Figure 6.13**).

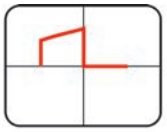

Figure 6.13 – Square Wave Showing a Decrease in C is Required

When making adjustments:

Resistor: Increase or decrease resistance values in increments of +/- 10%.

Capacitor: Incrementally decrease capacitor values by a factor of 2 or 3.

After final adjustments have been made to the circuit, the final waveform for your planned application should be tested to confirm the amplifier's compensation setting.

NOTE:

- If possible, use 1% metal film resistors. AE Techron discourages installation of potentiometers in the resistor location of the compensation circuit because this can decrease stability and may increase inductance.
- The parallel capacitor in the RC network serves to increase stability but can be removed, if it is not required for system stability. If the parallel capacitor is used, it will usually decrease the value of resistance needed.

6.4 Using the 7114 as a Battery Simulator/Four-Quadrant Supply

Unlike conventional power supplies, a 7114 amplifier can output positive or negative voltage and can sink or source current. This makes it great for use as a four-quadrant power supply or a battery simulator.

When used to test battery chargers or charging circuits, a 7114 can be used to easily vary the voltage to simulate the charging or discharging of a battery, and eliminate hours of test time.

A 7114 can supply a fixed DC voltage indefinitely, making it essential for DC power tests lasting minutes or hours. The variable ±45VDC capability makes the 7114 useful for simulation a wide range of battery types, as shown in **Figure 6.14.**

Test Setup

1. Connect a signal generator to the 7114 input.
2. Set the 7114 Gain switch to Fixed.
3. Set the signal generator to produce a DC signal. Determine the voltage level of the DC signal based on your output requirements adjusted for the amplifier gain (10X).

6.5 Using the 7114 for Overvoltage Testing

The 7114 can also produce a DC supply independent of a signal generator, making it useful for high-speed over-voltage testing. The 7114's on-board DC suppy can be used for powering the DUT at the standard 12 or 24 volts. Then a signal generator or arbitrary waveform generator can be used to produce the surge voltage.

Test Setup

1. Connect a signal generator or ARB to the 7114 input.
2. Set the 7114 Offset switch to Variable.
3. Adjust the Offset variable control knob to produce the desired DC supply output (such as 12V).
4. Set the 7114 Gain switch to Fixed.
5. Set the signal generator or ARB to produce a DC signal equal to the overvoltage level or surge waveform. Determine the voltage level

Battery Type	Lithium Ion	NiMH/NiCd	Alkaline	Lead-Acid
Capability	1-10 cells	1-28 cells	1-25 cells	6V/12V/24V

Figure 6.14 – 7114 DC Output Capabilties by Battery Type

of the DC signal based on your output requirements adjusted for the amplifier gain (10X), minus the DC supply. For example, a 3V DC input signal sent to the 7114 with a 12V supply setting would result in a 42V output sent to the DUT.

6.6 Using the 7114 for PSRR Measurements

A 7114 can be useful for making Power Supply Rejection Ratio (PSRR) measurements for devices like low dropout regulators (LDOs) and power amplifiers, especially when the device under test (DUT) is heavily loaded.

Typically, PSRR is measured with a network analyzer, although a function generator/oscillioscope combination also can be used for some devices. Most network analyzers have a source output of 50 ohms, so they cannot effectively drive an LDO into heavy loads (i.e., 1A). Because of this, LDO PSRR testing is often performed into light or no loads. But since LDO PSRR tends to decrease at heavier loads and is typically the worst at the maximum specified load, measuring power-supply rejection with light or no-load conditions is not considered representative of actual LDO PSRR.

Measuring the PSRR of a low dropout regulator into a heavy load requires a high current driver. The 7114 can provide both the DC supply and AC ripple for testing under these conditions.

6.6.1 LDO PSRR Measurement Using A Network Analyzer

You will need a network analyzer, an AE Techron 7114 amplifier and the device under test (DUT).

Test Setup

1. Connect from the network analyzer source to the signal input of the 7114.
2. Connect from the 7114 outputs to the LDO supply input.
3. Set the 7114's Coupling switch to AC.
4. Set the 7114's Offset switch to Variable, and then adjust the Offset variable control knob until the output DC voltage reaches the desired level (i.e., 3.3V).
5. Set the 7114's Gain switch to Fixed.
6. Set the network analyzer's output to a level that will produce the desired output at the LDO supply input (1/10 of desired output).

Calibration (Refer to **Figure 6.15)**

1. Connect from the network analyzer's Input A to the DUT board near the LDO supply input.
2. Connect from the network analyzer's Input B to the same point at Input A on the DUT.
3. Set the network analyzer to calibration mode and sweep over the frequency range to be measured (i.e., 100 Hz to 100 kHz). Save the calibration data for later use. (Refer to the network analyzer's instruction manual for the specifics of calibration setup.)

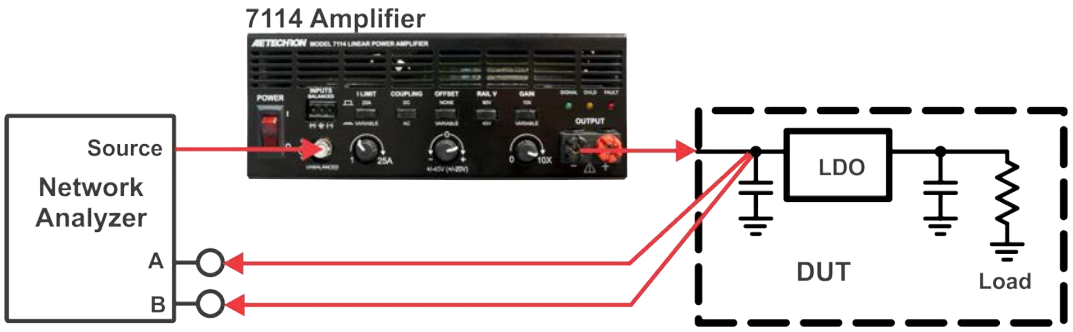

Figure 6.15 – LDO PSRR Measurement, Calibration Setup

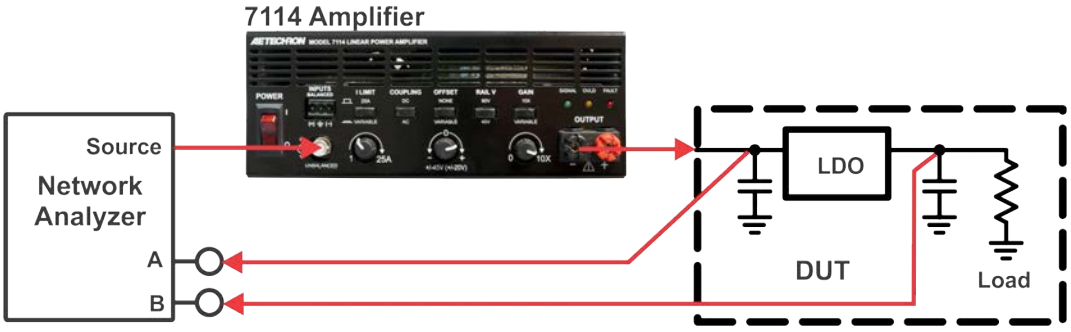

Figure 6.16 – LDO PSRR Measurement, Testing Setup

LDO PSRR Testing (Refer to **Figure 6.16)**

1. Connect the network analyzer's Input B to the LDO output near the capacitor. (Keep Input A connected to the LDO input.)
2. Repeat the sweep of the network analyzer over the desired frequency range.
3. Subtract the calibration data and then plot the resulting PSRR data.

6.6.2 LDO PSRR Measurement Using An Oscilloscope

You will need a function generator or arbitrary waveform generator, an AE Techron 7114 amplifier, an oscillioscope, and the device under test (DUT).

Test Setup (Refer to **Figure 6.17)**

1. Connect from the function generator or AWG to the signal input of the 7114.
2. Connect from the 7114 outputs to the LDO supply input.
3. Connect the oscilloscope's CH 1 probe to the LDO supply input near the capacitor. Connect the oscilloscope's CH 2 probe to the LDO output near the capacitor. A 1X probe is recommended because of the high oscilloscope noise floor.
4. Set the function generator's output to a level 1/10 of the desired output at the LDO supply input.
5. Set the function generator's frequency to the frequency to be tested (i.e., 1 kHz).
6. Set the 7114's Coupling switch to AC.
7. Set the 7114's Offset switch to Variable, and then adjust the Offset variable control knob until the output DC voltage reaches the desired level (i.e., 3.3V).
8. Set the 7114's Gain switch to Fixed.

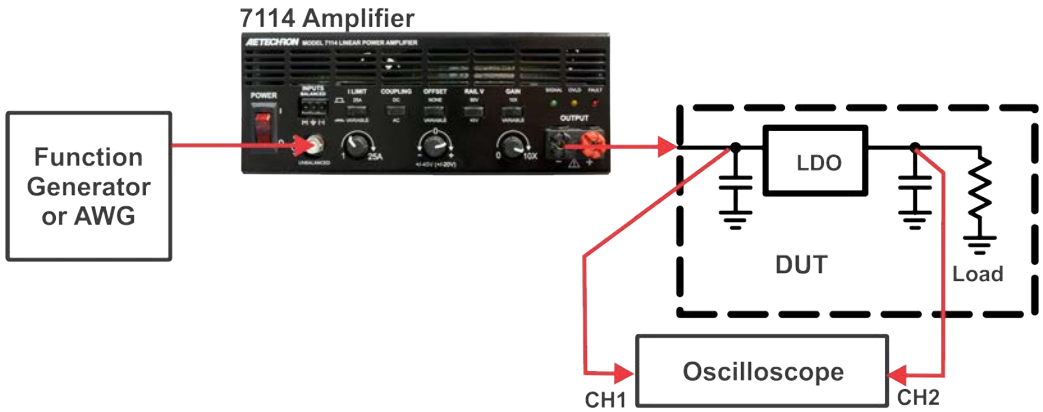

Figure 6.17 – LDO PSRR Measurement, Testing Setup using Oscilloscope

9. Use the oscilloscope to measure the amplitude voltage at CH1 and CH2. Use the following formula to calculate the PSRR (dB).

PSRR = 20log(CH2/CH1)

10. Adjust the frequency level of the function generator to the next frequency to be tested and repeat the oscilloscope measurements. Continue to make frequency adjustments until all desired frequencies have been tested.

6.6.3 Amplifier PSRR Measurement

AE Techron 7114 amplifier is great for making amplifier power supply rejection ratio measurements, especially power amps operating at maximum load conditions. It can also be used to measure PSRR for op-amps, differential amplifiers, unity gain buffers, digital-to-analog converters, analog-to-digital converters, and more.

You will need a network analyzer, an AE Techron 7114 amplifier, and the device under test (DUT).

Test Setup

1. Connect from the network analyzer source to the signal input of the 7114.
2. Connect from the 7114 outputs to the DUT's supply input.
3. Make sure the DUT's input is grounded.
4. Set the 7114's Coupling switch to AC.
5. Set the 7114's Offset switch to Variable, and then adjust the Offset variable control knob until the output DC voltage reaches the desired level (i.e., 3.3V).
6. Set the 7114's Gain switch to fixed.
7. Set the network analyzer's output to a level 1/10 of the desired output at the at the DUT's supply input.

Calibration (Refer to **Figure 6.18)**

1. Connect from the network analyzer's Input A to the DUT's supply input.
2. Connect from the network analyzer's Input B to the same point at Input A on the DUT.

Figure 6.18 – Amplifier PSRR Measurement, Calibration Setup

Figure 6.19 – Amplifier PSRR Measurement, Testing Setup

3. Set the network analyzer to calibration mode and sweep over the frequency range to be measured (i.e., 100 Hz to 100 kHz). Save the calibration data for later use. (Refer to the network analyzer's instruction manual for the specifics of calibration setup.)

Amplifier PSRR Testing (Refer to **Figure 6.19)**

1. Connect the network analyzer's Input B to the DUT's output. (Keep Input A connected to the supply input.)
2. Repeat the sweep of the network analyzer over the desired frequency range.
3. Subtract the calibration data and then plot the resulting PSRR data.

6.7 Using the 7114 for Amplfier CMRR Measurements

A 7114 amplifiercan be useful for making Common Mode Rejection Ratio (CMRR) measurements for devices like differential amplifiers and opamps.

6.7.1 Amplifier CMRR Measurement

You will need a network analyzer, an AE Techron 7114 amplifier, and the device under test (DUT).

Test Setup

1. Connect from the network analyzer source to the signal input of the 7114.
2. Connect the DUT's positive and negative inputs
3. Connect from the 7114's outputs to the DUT's connected positive and negative inputs.
4. Set the 7114's Coupling switch to AC.
5. Set the 7114's Offset switch to Variable, and then adjust the Offset variable control knob until the output DC voltage reaches the desired level (i.e., 3.3V).
6. Set the 7114's Gain switch to Fixed.
7. Set the network analyzer's output to a level 1/10 of the desired output at the DUT's input.

CMRR Calibration (Refer to **Figure 6.20)**

1. Connect from the network analyzer's Input A to the DUT's connected positive and negative inputs.
2. Connect from the network analyzer's Input B to the same point at the DUT's connected positive and negative inputs.
3. Set the network analyzer to calibration mode

Figure 6.20 – Amplifier CMRR Measurement, Calibration Setup

Figure 6.20 – Amplifier CMRR Measurement, Testing Setup

and sweep over the frequency range to be measured (i.e., 100 Hz to 100 kHz). Save the calibration data for later use. (Refer to the network analyzer's instruction manual for the specifics of calibration setup.)

CMRR Testing (Refer to **Figure 6.21)**

1. Connect the network analyzer's Input B to the DUT's output. (Keep Input A connected to the input.)
2. Repeat the sweep of the network analyzer over the desired frequency range.
3. Subtract the calibration data and then plot the resulting PSRR data.

6.8 Using the 7114 to Create Complex Waveforms

The 7114 amplifier provides two front-panel and one back-panel connector for signal input. The front-panel BNC connector provides unbalanced input, while the front-panel WECO and the back-panel DB-9 connectors provide balanced input.

Signal input can occur from one, two, or all three connectors simultaneously. In addition, a DC offset signal can be added, allowing for the control and amplification of a wide range of complex waveforms.

See Figure 6.21 for an example of a complex waveform that can be created using three signal inputs plus DC offset generation.

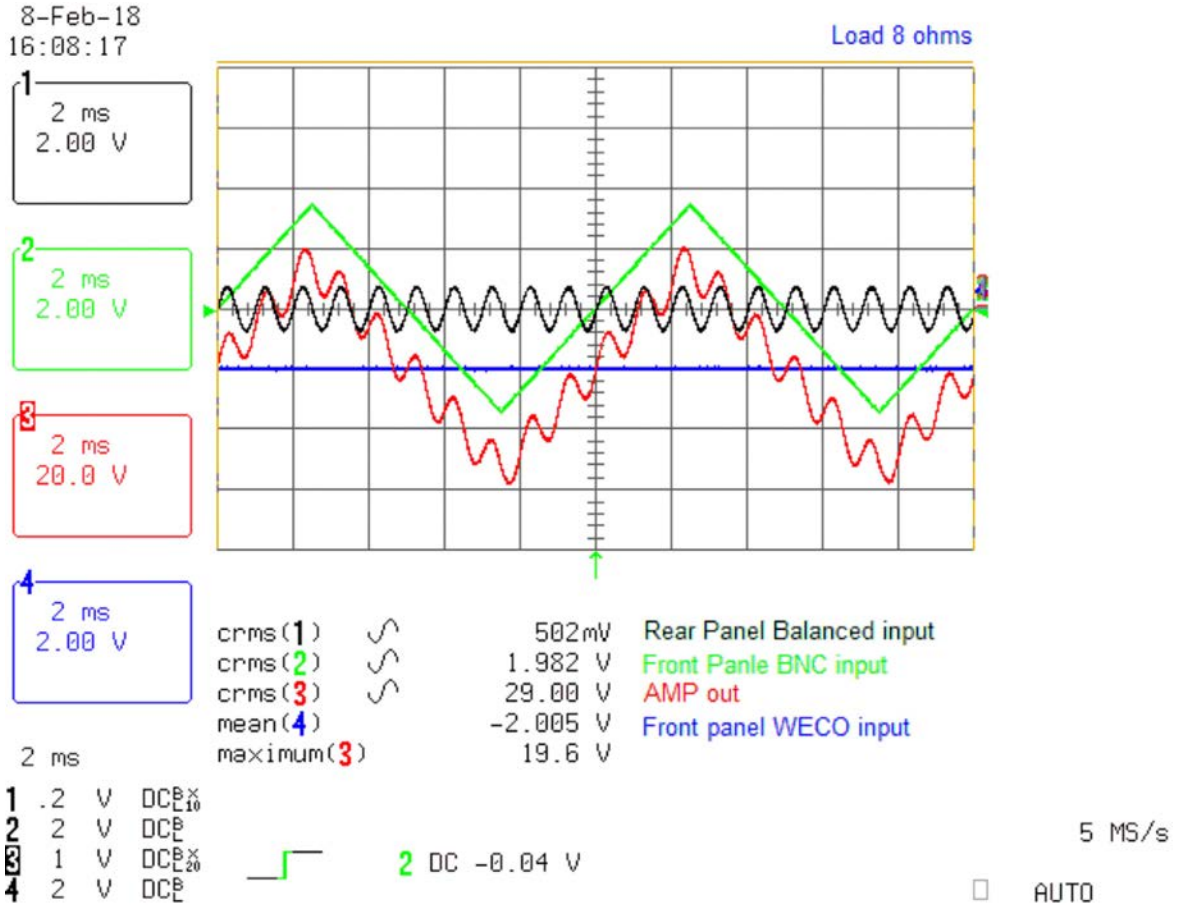

Figure 6.21 – Complex Waveforms Created Using DC Offset and Multiple Inputs

7 Maintenance

Simple maintenance can be performed by the user to help keep the equipment operational. The following routine maintenance is designed to prevent problems before they occur. See the ***Trouble-shooting*** section, for recommendations for restoring the equipment to operation after an error condition has occurred.

Preventative maintenance is recommended after the first 250 hours of operation, and every three months or 250 hours thereafter. If the equipment environment is dirty or dusty, preventative maintenance should be performed more frequently.

CAUTION

Before you begin, make sure your unit is disconnected from the power source, with power switch in the OFF position and the level control turned completely down (counter-clockwise).

7.1 Clean Filter and Grills

7.1.1 Tools Required

The recommended equipment and supplies needed to perform the functions required for this task are described below.

- Vacuum cleaner
- Damp cloth (use water only or a mild soap diluted in water)

To ensure adequate cooling and maximum efficiency of the internal cooling fans, the amplifier's front and rear grills should be cleaned periodically. To clean the grills, complete the following steps:

1. Turn the unit OFF. Disconnect the unit from its power source.
2. Using a vacuum cleaner, vacuum the front ventilation grill and the back ventilation exit grill.
3. Using a damp cloth, clean the front and rear ventilation grills. Dry with a clean cloth or allow to air dry. **IMPORTANT: Grills should be completely dry before plugging in or restarting product.**

8 Troubleshooting

8.1 Introduction & Precautions

This section provides a set of procedures for identifying and correcting problems with the 7114 amplifier. Rather than providing an exhaustive and detailed list of troubleshooting specifications, this section aims to provide a set of shortcuts intended to get an inoperative unit back in service as quickly as possible.

The procedures outlined in this section are directed toward an experienced electronic technician; it assumes that the technician has knowledge of typical electronic repair and test procedures.

Please be aware that the 7114 amplifier will undergo frequent engineering updates. As a result, modules and electronic assemblies may not be interchangeable between units. Particularly, the circuit boards undergo periodic engineering modifications that may make interchangeability between units impossible.

8.2 Visual Inspection

Before attempting to troubleshoot the product while it is operating, please take time to complete a visual inspection of the internal components of the unit.

DANGER

Uninsulated terminals with AC Mains potential are exposed when the cover is removed. Do not proceed until AC Mains have been disconnected.

8.2.1 Remove Top Cover

Tool Required

#1 Phillips screwdriver

Procedure

1. Remove power from the unit and disconnect any load from the outputs. Wait a minimum of three minutes to allow the amplifier's capacitors to discharge.
2. Use a #1 Phillips screwdriver to remove the twelve (12) Phillips-head screws, as shown in **Figure 8.1**.
3. Slide the cover towards the back of the unit, and then lift the cover straight up to remove and set aside.
4. To replace the top cover, slide the cover in to place on the unit and replace the twelve screws.

8.2.1 Perform Inspection

1. To perform a Visual Inspection, first turn the Power Switch to the Off (O) position.
2. Disconnect the AC mains plug from the unit.
3. Wait three to five minutes for the Power Supply capacitors to discharge.
4. Inspect the amplifier's internal components. Check the following:
5. Inspect modules for charring, breaks, deformation or other signs of physical damage.
6. Look for any foreign objects lodged inside the unit.
7. Inspect the entire lengths of wires and ribbon cables for breaks or other physical damage.
8. If there is any physical damage to the amplifier, please return it to AE Techron for repair.

8.3 No Signal

Missing Output signal may be caused by one of the following:

1. Signal is not connected to any inputs on the amplifier. See the ***Setup*** section in this manual for more information.
2. Input signal level is below 300 mV. The SIGNAL indicator will only illuminate when a signal above 300 mV is received. Increase the level of the input signal at the source.

8.4 No Power/Power Switch Not Illuminated

If the Power switch does not illuminate when the Power button is placed in the ON (|) position, check the following:

1. The AC mains are not connected or not on (see the ***Setup*** section for more information).
2. The unit's 15A (8A for 230V version) fuse has blown. Complete the following steps to inspect

and replace the fuse, if required:

1. Locate the fuse housing cover on the product's back panel (see Figure 6.2).
2. Using a small, flat-blade screwdriver, turn the cover counterclockwise to open the cover.
3. Remove the fuse, inspect, and replace if needed.
4. Replace the cover by using the flat-head screwdriver to push the fuse cover into the fuse housing while turning the cover clockwise.

If power to the unit is not restored after replacing the fuse, one of the unit's internal fuses may be blown. Return the unit to AE Techron for servicing. See the Factory Service information at the end of this section.

8.5 Fault LED is Illuminated

The Fault indicator will light when any one of four conditions occurs:

8.5.1 Overheating

There are two possible reasons why the product is overheating: Excessive power requirements or inadequate airflow.

Excessive Power Requirements

The unit will overheat if the required power exceeds the unit's capabilities. High duty cycles and low-impedance loads are especially prone to cause overheating. To see if excess power requirements are causing overheating, check the following:

1. The application's power requirements fall within the specifications of the amplifier. See the ***Specifications*** section.
2. Faulty output connections and load.
3. Undesired DC offset at the Output and Input signal.

Inadequate Airflow

If the unit chronically overheats with suitable power/load conditions, then it may not be receiving adequate airflow. To check for adequate airflow, proceed with the following steps:

1. Visually inspect fans to assure correct operation while the unit is On (I). When an Over-Temp fault occurs, the product's fans will automatically be placed in continuous high-speed operation. Any inoperative, visibly slow, or reverse-spinning fan should be replaced. Please see the Factory Service information at the end of this section.
2. Turn down your input signal and allow the fans to operate at high speed until they automatically switch to low-speed operation, indicating the amplifier has cooled enough to resume operation.

Resetting After OverTemp

To reset the product after an over-temperature fault has occurred, make sure fans are running (the fans should switch to high-speed operation when an over-temperature fault occurs). Turn down the input signal and allow the fans to run for several minutes until they automatically switch to low-speed operation, indicating the unit has cooled enough to resume operation. Then cycle the power switch to return the unit to normal operation.

NOTE: If the product's transformers have overheated, the fans will typically need to operate for at least 10-15 minutes in order to resolve the over-temperature condition.

If the fault condition does not clear, return the product for Factory Service.

8.5.2 OverVoltage Condition

The amplifier will protect itself from AC mains voltage that is 10% above the voltage indicated on the back panel. If the AC mains voltage is more than 10% above the operating voltage, reduce the AC mains voltage to the proper level. When the line voltage condition is corrected, cycle the power switch to return the unit to normal operation. If the Fault condition does not clear, the unit's three internal transformers may need to be replaced. Please see the **Factory Service** information at the end of this section.

8.5.3 Overload Condition

If the unit's internal Overload Latch jumper setting has been changed from the factory defaul and configured for shutdown when an overload condition occurs, the FAULT indicator will light when an overload condition occurs.

To clear the fault-at-overload condition, turn down the level of the input signal and/or the gain control on the front panel until the OVLD LED turns off.

8.5.4 Component Failure

The 7114 amplifier contains protection circuitry that disables the unit if an output stage is behaving abnormally. This usually indicates an output transistor has shorted.

To clear the Fault condition, follow these steps:

1. Turn off the signal source.
2. Cycle the Power button.
3. If the Fault LED doesn't illuminate again, turn the signal source on.
4. If the Fault LED is still illuminated and the Fault condition doesn't clear, return the product for Factory Service. See the Factory Service information at the end of this section.

CAUTION

Shut off the signal source before resetting the amplifier. Try resetting the Fault condition only once. If the Fault condition does not clear after one reset, STOP. Contact AE Techron Support for further assistance. Repeated resetting can damage the unit.

8.6 Factory Service

If the troubleshooting procedures are unsuccessful, the amplifier may need to be returned for Factory Service. All units under warranty will be serviced free of charge (customer is responsible for one-way shipping charges as well as any custom fees, duties, and/or taxes). Please review the Warranty at the beginning of this manual for more information.

All service units must be given a Service Ticket by AE Techron, Inc. before being returned. Service Tickets can be requested on our website at http://aetechron.com or by contacting our Customer Service Department at 574-295-9495.

Please take extra care when packaging your amplifier for repair. It should be returned in its original packaging or a suitable alternative. Replacement packaging materials can be purchased from AE Techron for a nominal fee.

Please send all service units to the following address and be sure to include your Ticket Number on the box.

AE Techron, Inc.
Attn: Service Department / Ticket Number #
2507 Warren Street
Elkhart, IN 46516

9 Specifications

Performance

Testing was done at 100 Hz. Continuous DC power levels are lower. See DC Specifications chart.

Frequency Response, DC–100 kHz (1 watt):
+0 to -3.0 dB

Small Signal (8V p-p): 500 kHz

8-Ohm Power Response (continuous duty),
DC to 60 kHz: ± 65 Vpk
DC to 80 kHz: ± 60 Vpk
DC to 200 kHz : ± 37Vpk

Slew Rate: >40 V/µSec

Residual Noise,
10 Hz to 22 kHz: 200 µV (0.20 mV)
10 Hz to 80 kHz: 500 µV (0.50 mV)
10 Hz to 500 kHz: 1500 µV (1.50 mV)

Signal-to-Noise Ratio,
10 Hz - 22 kHz: –110 dB
10 Hz - 80 kHz: –102 dB
10 Hz - 500 kHz: –91 dB

THD (DC - 50 kHz): <0.5%

DC Offset: <±10 mV

DC Drift: <±3 mV

Output Impedance: 10 mOhm in Series with 0.95 µH

Phase Response (10 Hz - 10 kHz):
±6 degrees including 800 nsec propagation delay

Input Characteristics

Connectors,
Balanced with ground: Three terminal barrier block connector, 20k ohm differential
Balanced with ground: Back-panel DB-9 connector (pins 1, 2 and 3), 20k ohm differential
Unbalanced: BNC connector, 10k ohm single ended

Gain (variable or fixed):
Voltage Mode: 10 volts/volt
Current Mode: 5 amperes/volt

Gain Linearity (over input signal, from 0.2V to 5V):
±0.05%

Max Input Voltage: ±10V, balanced or unbalanced

Display, Control, Status, I/O

Front Panel

Toggle Switch for: Power

I LIMIT,
Switch: 25A fixed or variable
Variable Control Knob: 1 - 25A

COUPLING Switch: AC or DC

OFFSET,
Switch: None or Variable
Variable Control Knob: ±20V (configurable for ±45V)

RAIL V Switch (voltage potential): 90V or 45V

GAIN,
Switch: 10X fixed or variable
Variable Control Knob: 0-10X

LED Displays indicate: Power, Signal, Overload, Fault

Signal Input: Unbalanced BNC or balanced Barrier Strip

Signal Output: One pair of 5-Way Binding Posts, accepts wire up to 12 AWG

Back Panel
Power Connection: 25 Amp IEC (with retention latch)

DB-9 Connector for: Balanced signal input, remote blanking/emergency stop, fault monitor, current monitor.

Communication Capabilities

(via back-panel DB-9 Control Port)

Current Monitor: 5A/V ±1%

Reporting: System Fault

Remote Control: Blanking/Fast Mute/Emergency Stop

Physical Characteristics

Chassis:
The amplifier is designed for stand- alone or rack-mounted operation. The Chassis is steel with a black powder coat finish. The unit occupies one-half rack of two EIA RU.

Weight: 20 lbs (9.1 kg), Shipping 26 lbs (11.8 kg)

AC Power:
Single phase, 120 VAC, 60 Hz, 15A service;
(220-240 VAC, 50-60 Hz, 8A service model available)

Operating Temperature:
10°C to 50°C (50°F to 122°F), maximum output power de-rated above 30°C (86°F).)

Humidity: 70% or less, non-condensing

Cooling:
Two-speed forced air cooling from front to back

Dimensions:
9.5 in. x 22.75 in. x 3.5 in. (24.1 cm x 57.8 cm x 8.9 cm)

Protection

Over/Under Voltage:
±10% from specified supply voltage amplifier is forced to Standby

Over Current:
Fuse on both main power and low voltage supplies

Over Temperature:
Separate output transistor, heat sink, and transformer temperature monitoring and protection

AC Specifications – High Voltage Mode

	PEAK OUTPUT						RMS OUTPUT				
	40 mSec Pulse, 20% Duty Cycle		5 Minutes, 100% Duty Cycle		1 Hour, 100% Duty Cycle		5 Minutes, 100% Duty Cycle		1 Hour, 100% Duty Cycle		
Ohms	Volts	Amps	Volts	Amps	Volts	Amps	Volts	Amps	Volts	Amps	Watts
Open	90.5	0.0	90.5	0.0	90.5	0.0	64.0	0.0	64.0	0.0	0
16	76.8	4.8	76.8	4.9	76.8	4.9	54.3	3.4	54.3	3.4	185
8	68.2	8.6	68.2	8.6	68.2	8.6	48.2	6.1	48.2	6.1	292
4	58.0	14.6	56.6	14.1	56.6	14.1	41.1	10.3	41.0	10.3	422
2	42.4	21.2	42.4	21.2	28.3	14.1	30.0	15.0	20.0	10.0	200

AC Specifications – High Current Mode

	PEAK OUTPUT						RMS OUTPUT				
	40 mSec Pulse, 20% Duty Cycle		5 Minutes, 100% Duty Cycle		1 Hour, 100% Duty Cycle		5 Minutes, 100% Duty Cycle		1 Hour, 100% Duty Cycle		
Ohms	Volts	Amps	Volts	Amps	Volts	Amps	Volts	Amps	Volts	Amps	Watts
Open	42.4	0.0	42.4	0.0	42.4	0.0	30.0	0.0	30.0	0.0	0
4	31.7	8.1	31.7	8.1	31.7	8.1	22.4	5.7	22.4	5.7	127
2	27.9	14.0	26.6	13.4	26.6	13.4	18.8	9.5	18.8	9.5	178
1	19.8	19.8	19.8	19.8	19.8	19.8	14.0	14.0	14.0	14.0	196
0.5	12.0	24.0	12.0	24.0	12.0	24.0	8.5	17.0	8.5	17.0	128

DC Specifications
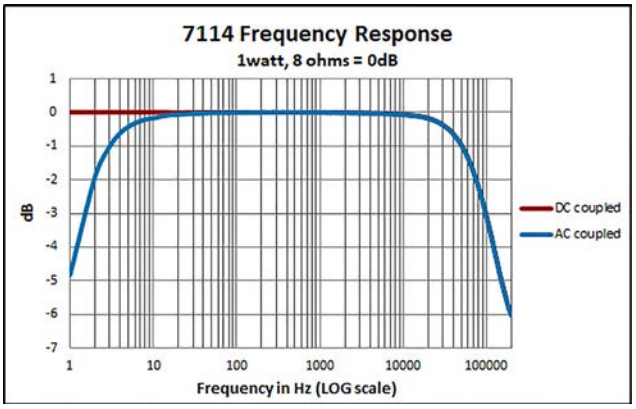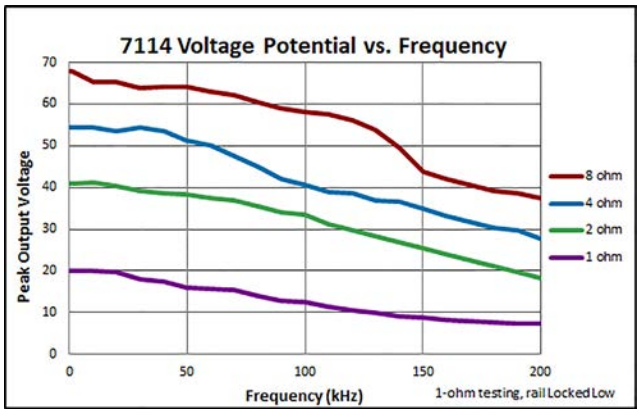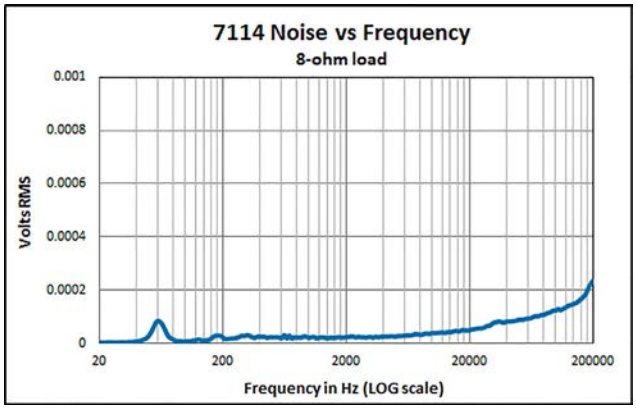
	OUTPUT (Amperes)	
VDC	5 Minutes, 100% Duty Cycle	1 Hour, 100% Duty Cycle
48	12	8
24	10	9
13.5	20	15